www.yesterdaysmathsexam.com

Write your name here

Surname	Other names

Pearson Edexcel Level 3 GCE

Centre Number | Candidate Number

Mathematics

Advanced
Paper 3: Statistics and Mechanics

Friday 15 June 2018 – Afternoon
Time: 2 hours

Paper Reference
9MA0/03

You must have:
Mathematical Formulae and Statistical Tables, calculator

Total Marks

Candidates may use any calculator allowed by the regulations of the Joint Council for Qualifications. Calculators must not have the facility for symbolic algebra manipulation, differentiation and integration, or have retrievable mathematical formulae stored in them.

Instructions
- Use **black** ink or ball-point pen.
- If pencil is used for diagrams/sketches/graphs it must be dark (HB or B).
- **Fill in the boxes** at the top of this page with your name, centre number and candidate number.
- Answer **all** questions and ensure that your answers to parts of questions are clearly labelled.
- Answer the questions in the spaces provided – *there may be more space than you need.*
- You should show sufficient working to make your methods clear. Answers without working may not gain full credit.
- Answers should be given to three significant figures unless otherwise stated.

Information
- A booklet 'Mathematical Formulae and Statistical Tables' is provided.
- There are 10 questions in this question paper. The total mark for this paper is 100.
- The marks for **each** question are shown in brackets – *use this as a guide as to how much time to spend on each question.*

Advice
- Read each question carefully before you start to answer it.
- Try to answer every question.
- Check your answers if you have time at the end.

Turn over ▶

©2018 Pearson Education Ltd.

P 5 8 3 5 0 A 0 1 3 6

Pearson

SECTION A: STATISTICS

Answer ALL questions. Write your answers in the spaces provided.

1. Helen believes that the random variable C, representing cloud cover from the large data set, can be modelled by a discrete uniform distribution.

(a) Write down the probability distribution for C.

(2)

(b) Using this model, find the probability that cloud cover is less than 50%

(1)

Helen used all the data from the large data set for Hurn in 2015 and found that the proportion of days with cloud cover of less than 50% was 0.315

(c) Comment on the suitability of Helen's model in the light of this information.

(1)

(d) Suggest an appropriate refinement to Helen's model.

(1)

DO NOT WRITE IN THIS AREA
DO NOT WRITE IN THIS AREA
DO NOT WRITE IN THIS AREA

www.yesterdaysmathsexam.com

DO NOT WRITE IN THIS AREA
DO NOT WRITE IN THIS AREA
DO NOT WRITE IN THIS AREA

Question 1 continued

(Total for Question 1 is 5 marks)

2. Tessa owns a small clothes shop in a seaside town. She records the weekly sales figures, £w, and the average weekly temperature, t °C, for 8 weeks during the summer.
The product moment correlation coefficient for these data is −0.915

(a) Stating your hypotheses clearly and using a 5% level of significance, test whether or not the correlation between sales figures and average weekly temperature is negative.
(3)

(b) Suggest a possible reason for this correlation.
(1)

Tessa suggests that a linear regression model could be used to model these data.

(c) State, giving a reason, whether or not the correlation coefficient is consistent with Tessa's suggestion.
(1)

(d) State, giving a reason, which variable would be the explanatory variable.
(1)

Tessa calculated the linear regression equation as $w = 10\,755 - 171t$

(e) Give an interpretation of the gradient of this regression equation.
(1)

DO NOT WRITE IN THIS AREA
DO NOT WRITE IN THIS AREA
DO NOT WRITE IN THIS AREA

DO NOT WRITE IN THIS AREA
DO NOT WRITE IN THIS AREA
DO NOT WRITE IN THIS AREA

Question 2 continued

(Total for Question 2 is 7 marks)

3. In an experiment a group of children each repeatedly throw a dart at a target.
For each child, the random variable H represents the number of times the dart hits the target in the first 10 throws.

Peta models H as B(10, 0.1)

(a) State two assumptions Peta needs to make to use her model.

(2)

(b) Using Peta's model, find $P(H \geqslant 4)$

(1)

For each child the random variable F represents the number of the throw on which the dart first hits the target.

Using Peta's assumptions about this experiment,

(c) find $P(F = 5)$

(2)

Thomas assumes that in this experiment no child will need more than 10 throws for the dart to hit the target for the first time. He models $P(F = n)$ as

$$P(F = n) = 0.01 + (n - 1) \times \alpha$$

where α is a constant.

(d) Find the value of α

(4)

(e) Using Thomas' model, find $P(F = 5)$

(1)

(f) Explain how Peta's and Thomas' models differ in describing the probability that a dart hits the target in this experiment.

(1)

DO NOT WRITE IN THIS AREA
DO NOT WRITE IN THIS AREA
DO NOT WRITE IN THIS AREA

DO NOT WRITE IN THIS AREA
DO NOT WRITE IN THIS AREA
DO NOT WRITE IN THIS AREA

Question 3 continued

www.yesterdaysmathsexam.com

Question 3 continued

DO NOT WRITE IN THIS AREA
DO NOT WRITE IN THIS AREA
DO NOT WRITE IN THIS AREA

DO NOT WRITE IN THIS AREA
DO NOT WRITE IN THIS AREA
DO NOT WRITE IN THIS AREA

Question 3 continued

(Total for Question 3 is 11 marks)

4. Charlie is studying the time it takes members of his company to travel to the office.
He stands by the door to the office from 08 40 to 08 50 one morning and asks workers, as they arrive, how long their journey was.

(a) State the sampling method Charlie used.

(1)

(b) State and briefly describe an alternative method of non-random sampling Charlie could have used to obtain a sample of 40 workers.

(2)

Taruni decided to ask every member of the company the time, x minutes, it takes them to travel to the office.

(c) State the data selection process Taruni used.

(1)

Taruni's results are summarised by the box plot and summary statistics below.

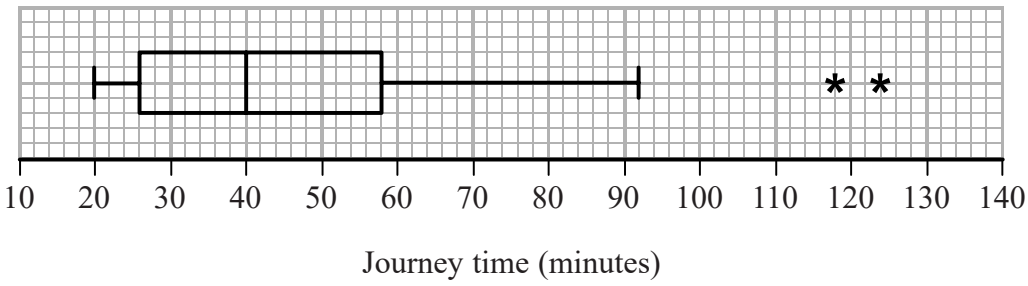

$$n = 95 \qquad \sum x = 4133 \qquad \sum x^2 = 202\,294$$

(d) Write down the interquartile range for these data.

(1)

(e) Calculate the mean and the standard deviation for these data.

(3)

(f) State, giving a reason, whether you would recommend using the mean and standard deviation or the median and interquartile range to describe these data.

(2)

Rana and David both work for the company and have both moved house since Taruni collected her data.

Rana's journey to work has changed from 75 minutes to 35 minutes and David's journey to work has changed from 60 minutes to 33 minutes.

Taruni drew her box plot again and only had to change two values.

(g) Explain which two values Taruni must have changed and whether each of these values has increased or decreased.

(3)

DO NOT WRITE IN THIS AREA
DO NOT WRITE IN THIS AREA
DO NOT WRITE IN THIS AREA

DO NOT WRITE IN THIS AREA
DO NOT WRITE IN THIS AREA
DO NOT WRITE IN THIS AREA

Question 4 continued

Question 4 continued

DO NOT WRITE IN THIS AREA
DO NOT WRITE IN THIS AREA
DO NOT WRITE IN THIS AREA

DO NOT WRITE IN THIS AREA
DO NOT WRITE IN THIS AREA
DO NOT WRITE IN THIS AREA

Question 4 continued

(Total for Question 4 is 13 marks)

5. The lifetime, L hours, of a battery has a normal distribution with mean 18 hours and standard deviation 4 hours.

Alice's calculator requires 4 batteries and will stop working when any one battery reaches the end of its lifetime.

(a) Find the probability that a randomly selected battery will last for longer than 16 hours.
(1)

At the start of her exams Alice put 4 new batteries in her calculator.
She has used her calculator for 16 hours, but has another 4 hours of exams to sit.

(b) Find the probability that her calculator will not stop working for Alice's remaining exams.
(5)

Alice only has 2 new batteries so, after the first 16 hours of her exams, although her calculator is still working, she randomly selects 2 of the batteries from her calculator and replaces these with the 2 new batteries.

(c) Show that the probability that her calculator will not stop working for the remainder of her exams is 0.199 to 3 significant figures.
(3)

After her exams, Alice believed that the lifetime of the batteries was more than 18 hours. She took a random sample of 20 of these batteries and found that their mean lifetime was 19.2 hours.

(d) Stating your hypotheses clearly and using a 5% level of significance, test Alice's belief.
(5)

DO NOT WRITE IN THIS AREA
DO NOT WRITE IN THIS AREA
DO NOT WRITE IN THIS AREA

DO NOT WRITE IN THIS AREA
DO NOT WRITE IN THIS AREA
DO NOT WRITE IN THIS AREA

Question 5 continued

Question 5 continued

DO NOT WRITE IN THIS AREA
DO NOT WRITE IN THIS AREA
DO NOT WRITE IN THIS AREA

DO NOT WRITE IN THIS AREA
DO NOT WRITE IN THIS AREA
DO NOT WRITE IN THIS AREA

Question 5 continued

(Total for Question 5 is 14 marks)

TOTAL FOR SECTION A IS 50 MARKS

SECTION B: MECHANICS

Unless otherwise stated, whenever a numerical value of g is required, take $g = 9.8\,\text{m}\,\text{s}^{-2}$ and give your answer to either 2 significant figures or 3 significant figures.

Answer ALL questions. Write your answers in the spaces provided.

6. At time t seconds, where $t \geqslant 0$, a particle P moves in the x-y plane in such a way that its velocity $\mathbf{v}\,\text{m}\,\text{s}^{-1}$ is given by

$$\mathbf{v} = t^{-\frac{1}{2}}\mathbf{i} - 4t\mathbf{j}$$

When $t = 1$, P is at the point A and when $t = 4$, P is at the point B.

Find the exact distance AB.

(6)

DO NOT WRITE IN THIS AREA
DO NOT WRITE IN THIS AREA
DO NOT WRITE IN THIS AREA

DO NOT WRITE IN THIS AREA
DO NOT WRITE IN THIS AREA
DO NOT WRITE IN THIS AREA

Question 6 continued

(Total for Question 6 is 6 marks)

7.

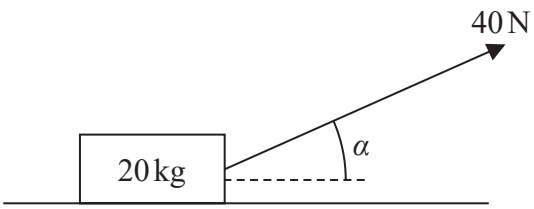

Figure 1

A wooden crate of mass 20 kg is pulled in a straight line along a rough horizontal floor using a handle attached to the crate.

The handle is inclined at an angle α to the floor, as shown in Figure 1, where $\tan\alpha = \frac{3}{4}$

The tension in the handle is 40 N.
The coefficient of friction between the crate and the floor is 0.14
The crate is modelled as a particle and the handle is modelled as a light rod.

Using the model,

(a) find the acceleration of the crate.

(6)

The crate is now pushed along the same floor using the handle. The handle is again inclined at the same angle α to the floor, and the thrust in the handle is 40 N as shown in Figure 2 below.

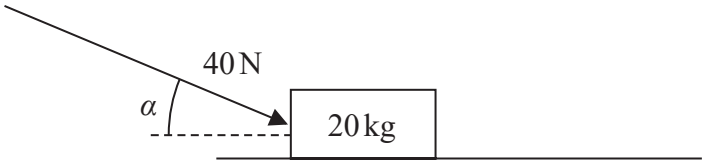

Figure 2

(b) Explain briefly why the acceleration of the crate would now be less than the acceleration of the crate found in part (a).

(2)

DO NOT WRITE IN THIS AREA
DO NOT WRITE IN THIS AREA
DO NOT WRITE IN THIS AREA

DO NOT WRITE IN THIS AREA
DO NOT WRITE IN THIS AREA
DO NOT WRITE IN THIS AREA

Question 7 continued

Question 7 continued

DO NOT WRITE IN THIS AREA
DO NOT WRITE IN THIS AREA
DO NOT WRITE IN THIS AREA

DO NOT WRITE IN THIS AREA
DO NOT WRITE IN THIS AREA
DO NOT WRITE IN THIS AREA

Question 7 continued

(Total for Question 7 is 8 marks)

8. [*In this question* **i** *and* **j** *are horizontal unit vectors due east and due north respectively and position vectors are given relative to the fixed point O.*]

A particle P moves with constant acceleration.
At time $t = 0$, the particle is at O and is moving with velocity $(2\mathbf{i} - 3\mathbf{j})\,\mathrm{m\,s^{-1}}$
At time $t = 2$ seconds, P is at the point A with position vector $(7\mathbf{i} - 10\mathbf{j})\,\mathrm{m}$.

(a) Show that the magnitude of the acceleration of P is $2.5\,\mathrm{m\,s^{-2}}$

(4)

At the instant when P leaves the point A, the acceleration of P changes so that P now moves with constant acceleration $(4\mathbf{i} + 8.8\mathbf{j})\,\mathrm{m\,s^{-2}}$

At the instant when P reaches the point B, the direction of motion of P is north east.

(b) Find the time it takes for P to travel from A to B.

(4)

DO NOT WRITE IN THIS AREA
DO NOT WRITE IN THIS AREA
DO NOT WRITE IN THIS AREA

DO NOT WRITE IN THIS AREA
DO NOT WRITE IN THIS AREA
DO NOT WRITE IN THIS AREA

Question 8 continued

Question 8 continued

DO NOT WRITE IN THIS AREA
DO NOT WRITE IN THIS AREA
DO NOT WRITE IN THIS AREA

www.yesterdaysmathsexam.com

DO NOT WRITE IN THIS AREA
DO NOT WRITE IN THIS AREA
DO NOT WRITE IN THIS AREA

Question 8 continued

(Total for Question 8 is 8 marks)

9.

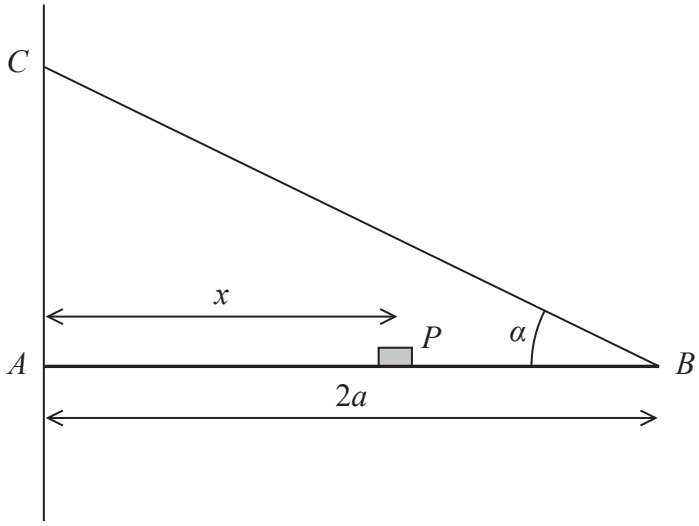

Figure 3

A plank, AB, of mass M and length $2a$, rests with its end A against a rough vertical wall. The plank is held in a horizontal position by a rope. One end of the rope is attached to the plank at B and the other end is attached to the wall at the point C, which is vertically above A.

A small block of mass $3M$ is placed on the plank at the point P, where $AP = x$. The plank is in equilibrium in a vertical plane which is perpendicular to the wall.

The angle between the rope and the plank is α, where $\tan\alpha = \frac{3}{4}$, as shown in Figure 3.

The plank is modelled as a uniform rod, the block is modelled as a particle and the rope is modelled as a light inextensible string.

(a) Using the model, show that the tension in the rope is $\frac{5Mg(3x + a)}{6a}$

(3)

The magnitude of the horizontal component of the force exerted on the plank at A by the wall is $2Mg$.

(b) Find x in terms of a.

(2)

The force exerted on the plank at A by the wall acts in a direction which makes an angle β with the horizontal.

(c) Find the value of $\tan\beta$

(5)

The rope will break if the tension in it exceeds $5Mg$.

(d) Explain how this will restrict the possible positions of P. You must justify your answer carefully.

(3)

DO NOT WRITE IN THIS AREA
DO NOT WRITE IN THIS AREA
DO NOT WRITE IN THIS AREA

DO NOT WRITE IN THIS AREA
DO NOT WRITE IN THIS AREA
DO NOT WRITE IN THIS AREA

Question 9 continued

Question 9 continued

DO NOT WRITE IN THIS AREA
DO NOT WRITE IN THIS AREA
DO NOT WRITE IN THIS AREA

DO NOT WRITE IN THIS AREA
DO NOT WRITE IN THIS AREA
DO NOT WRITE IN THIS AREA

Question 9 continued

(Total for Question 9 is 13 marks)

10.

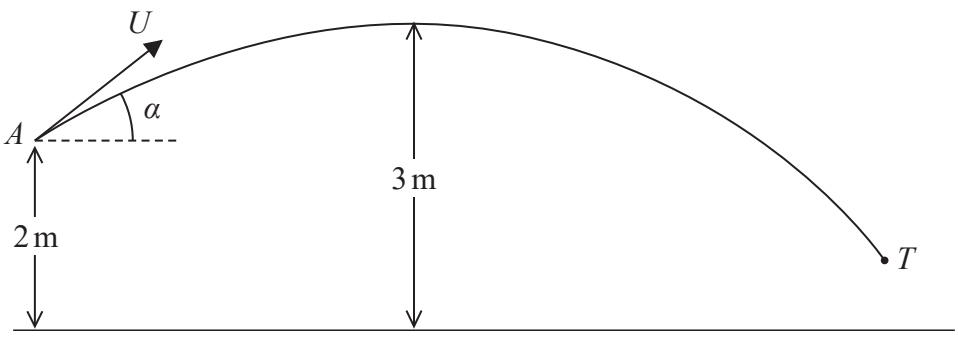

Figure 4

A boy throws a ball at a target. At the instant when the ball leaves the boy's hand at the point A, the ball is 2 m above horizontal ground and is moving with speed U at an angle α above the horizontal.

In the subsequent motion, the highest point reached by the ball is 3 m above the ground. The target is modelled as being the point T, as shown in Figure 4.
The ball is modelled as a particle moving freely under gravity.

Using the model,

(a) show that $U^2 = \dfrac{2g}{\sin^2 \alpha}$.

(2)

The point T is at a horizontal distance of 20 m from A and is at a height of 0.75 m above the ground. The ball reaches T without hitting the ground.

(b) Find the size of the angle α

(9)

(c) State one limitation of the model that could affect your answer to part (b).

(1)

(d) Find the time taken for the ball to travel from A to T.

(3)

DO NOT WRITE IN THIS AREA
DO NOT WRITE IN THIS AREA
DO NOT WRITE IN THIS AREA

DO NOT WRITE IN THIS AREA
DO NOT WRITE IN THIS AREA
DO NOT WRITE IN THIS AREA

Question 10 continued

www.yesterdaysmathsexam.com

Question 10 continued

DO NOT WRITE IN THIS AREA
DO NOT WRITE IN THIS AREA
DO NOT WRITE IN THIS AREA

DO NOT WRITE IN THIS AREA
DO NOT WRITE IN THIS AREA
DO NOT WRITE IN THIS AREA

Question 10 continued

www.yesterdaysmathsexam.com

Question 10 continued

(Total for Question 10 is 15 marks)

TOTAL FOR SECTION B IS 50 MARKS

TOTAL FOR PAPER IS 100 MARKS

DO NOT WRITE IN THIS AREA
DO NOT WRITE IN THIS AREA
DO NOT WRITE IN THIS AREA